A QUIET LOOK AT BIRDS

Free Printables

A companion pack for *The Purple Martin Landlord*

Brian Rolfs · Arvum Press

Letter size (8½ × 11 in.). Print these pages for your own use. They match the checklists, logs, and plans in the book.

In this pack

- Checklists (buying, siting, opening day, the nest-check kit, each nest check, cold-snap watch, and end of season)
- Nest-check log (plus an extra blank page)
- Room-by-room season summary
- Arrival and season record, and a page for cold snaps and storms
- Your First Season, a keepsake record for first scout, first pair, eggs, hatch, fledge and counts
- Plan A, the Starter Four, printed as large as a letter sheet allows
- Plan B, the Classic Twelve
- Plan C, the Stack-Six module
- The 12-gourd rack

These pages are not a substitute for the book. Read the building notes, siting rules, and safety advice before you cut wood or dig a hole. The plans are original diagrams made for the book.

Checklists

Print these lists and check the boxes in pencil. Each list sums up a chapter in The Purple Martin Landlord.

Before You Buy or Build

- ☐ Rooms at least 6 × 6 in., better 7 × 12 in.
- ☐ Gourds at least 8 in. across; 10 to 12 in. is ideal
- ☐ Round holes 2⅛ in. (1¾ to 2¼), or crescents 3 × 1 3/16 in.
- ☐ Doors or caps that open for nest checks
- ☐ Vents near the top and drain holes in every floor
- ☐ White paint, outside only
- ☐ A pole that lowers straight down and locks so the housing always faces the same way
- ☐ A pole guard and an owl guard
- ☐ At least 4 rooms to start; 6 are better

Siting Day

- ☐ No trees taller than the housing within 40 ft, better 60 ft
- ☐ 30 to 120 ft from your house, where you can see it
- ☐ No wires, vines or shrubs touching the pole
- ☐ HOA and town rules checked
- ☐ 811 called a few business days before digging
- ☐ Clear of overhead power lines
- ☐ Away from patios, cars and walkways

Opening Day

- ☐ Arrival dates for your area looked up
- ☐ Housing up with holes plugged a few weeks before martins are due
- ☐ New site: opened about four weeks after the first adults usually arrive
- ☐ 1 to 2 in. of pine straw in each room
- ☐ Decoys mounted; dawnsong recording ready
- ☐ Crushed eggshells or oyster shell offered
- ☐ Ready to remove sparrow and starling nests at once

The Nest-Check Kit

- ☐ Nest-check sheets on a clipboard, and a pencil
- ☐ Headlamp or small flashlight

- [ ] Small mirror
- [ ] Plugs on strings for young 22 days and older
- [ ] Spare latch, hanger and gourd cap
- [ ] Small lidded bucket for removed sparrow nests
- [ ] Fresh pine straw
- [ ] A licensed wildlife rehabilitator's phone number

Each Nest Check

- [ ] Midday or afternoon, in fair weather
- [ ] Older young plugged in first
- [ ] Housing lowered slowly
- [ ] One room at a time; stage, eggs and young recorded
- [ ] Trouble checked: competitors, dead young, capped eggs, parasites, wet nests
- [ ] Every door and cap closed
- [ ] Housing raised facing the same way, alignment marks matched
- [ ] Down for no more than 20 minutes

Cold-Snap Watch

- [ ] Below about 48°F for three days, or steady rain for more than three? Act now.
- [ ] Crickets or mealworms on hand
- [ ] Tossing food before the birds grow weak
- [ ] Entrances checked for birds that have died there

End of Season

- [ ] New site: housing left open until late August or later
- [ ] All old nests removed
- [ ] Rooms scrubbed with 10 percent bleach, rinsed and dried
- [ ] Doors, latches and hangers repaired; housing repainted
- [ ] Winch oiled, cable and guard checked
- [ ] Housing stored, or every hole plugged
- [ ] Season's records filed, and sent to Project MartinWatch if you take part

Nest-Check Log

Copy this page for your own use. Lower the housing in the afternoon, check one room at a time, and stay down no more than 20 minutes.

Site: _____ System: _____ Year: _____

Date	Room	Stage	Eggs	Young (age)	Notes

Stages: E = empty, M = nest material, L = green leaves, I = incubating, H = hatching, N = nestlings, F = fledged. The female usually starts incubating with the next-to-last egg. Eggs hatch about 15 to 16 days later, and young fledge 26 to 32 days after hatching.

Nest-Check Log (extra page)

Extra nest-check log. Print as many copies as you need.

Site: _____ System: _____ Year: _____

Date	Room	Stage	Eggs	Young (age)	Notes

Stages: E = empty, M = nest material, L = green leaves, I = incubating, H = hatching, N = nestlings, F = fledged.

Room-by-Room Season Summary

Site: _____ Year: _____

Room	First egg	Eggs	Hatched	Fledged	Adults (age)	Notes

Arrival and Season Record

Keep one line per year. After two or three years this record is the best timing guide you have.

Site: _____

Year	First martin	First subadult	Opened	First egg	Last fledged	Pairs	Closed

Cold Snaps, Storms and Other Events

Site: _____ Year: _____

Date	What happened	What you did

Your First Season

A page to keep. Fill it in as the season unfolds. Use the nest-check log and the arrival record for week-by-week detail.

Site: _____ Year: _____

First scout (date and what you saw):

_____

First pair settled:

_____

First egg: _____ First hatch: _____

First fledge: _____ Last fledged: _____

Pairs this season: _____ Young fledged: _____

Notes:

_____

_____

_____

_____

_____

If this was your first year with no nesting pair, use the checklist in the book before the next season.

Plan A: The Starter Four

Top view, roof removed

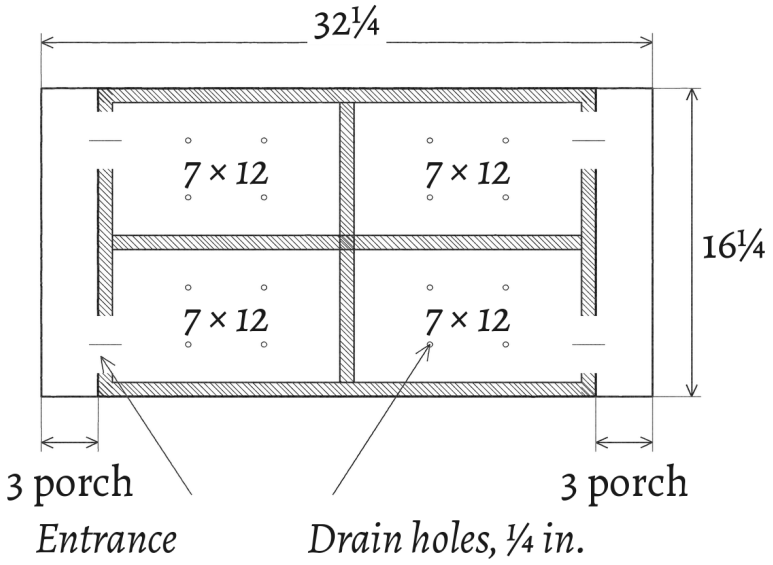

Front view

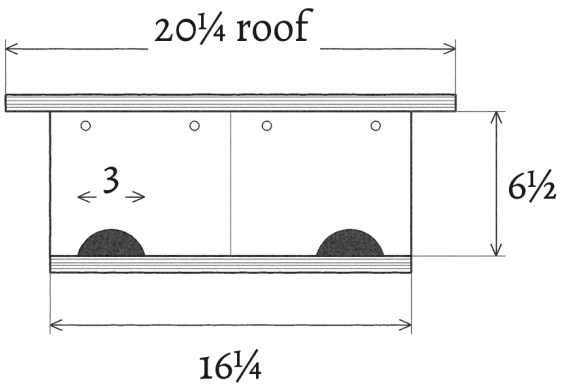

Crescents 3 × 1 3/16, flush with floor
Vents ½ in., angled up, under overhang

Four 7 × 12 in. rooms under a lift-off roof, with porches front and back. This page is letter-size so you can print the drawing as large as the sheet allows. Use the measurements printed on the plan. Full building notes are in the book.

Plan B: The Classic Twelve

Front view

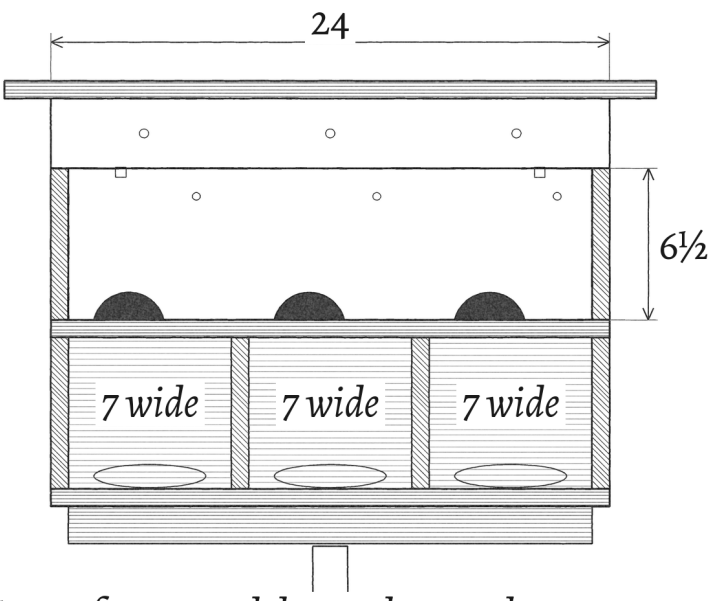

Lower front panel dropped open: three rooms

Side section

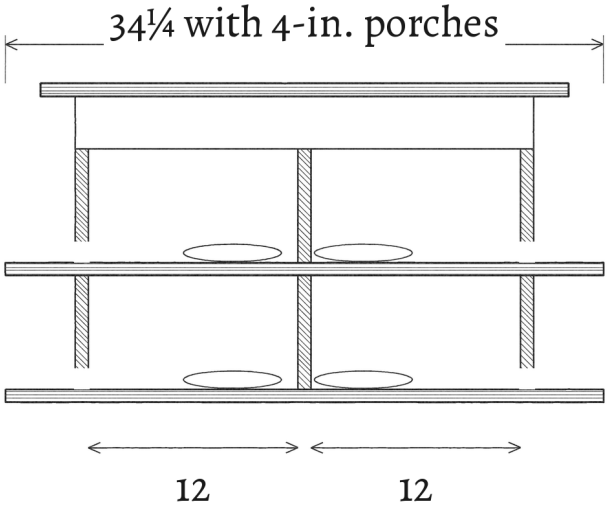

Nests sit at the back, out of reach

Twelve 7 × 12 in. rooms. Drop-down front panels give access to three rooms at a time. Print this page at 100 percent (no "fit to page" shrinking). Full building notes are in the book.

Plan C: The Stack-Six Module

Front view, exploded

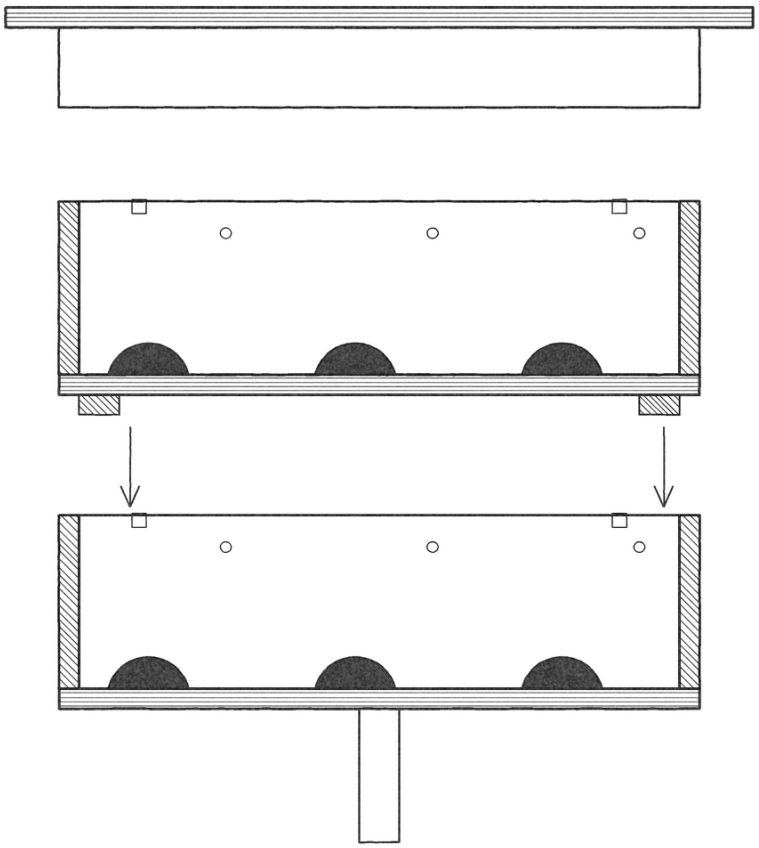

Roof and attic

Module 2, added later

Locating cleats drop inside the walls below

Module 1

Hasps join the modules

Start with one six-room module; add a second or third as the colony grows. Build each module like one story of Plan B. Full building notes are in the book.

The 12-Gourd Rack

Side view

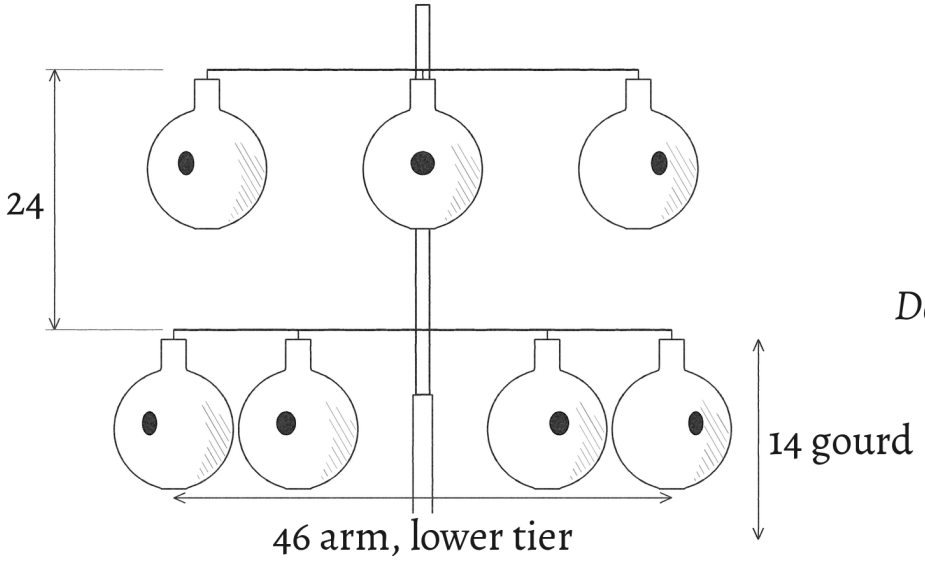

Top view

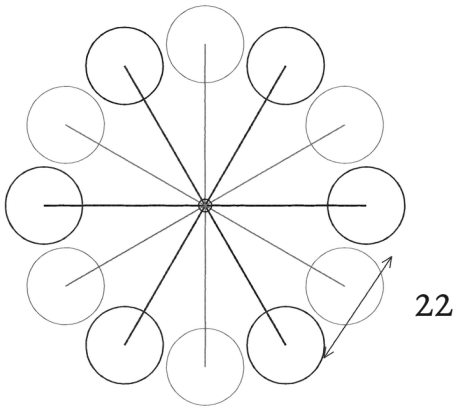

Dark: lower tier. Light: upper tier.

Two tiers of six arms; gourds hang about 22 in. apart, center to center. Print at 100 percent. Full building notes, including pole and guard advice, are in the book.

Notes for the season

Extra lines for weather, competitors, and anything you want to remember next year.